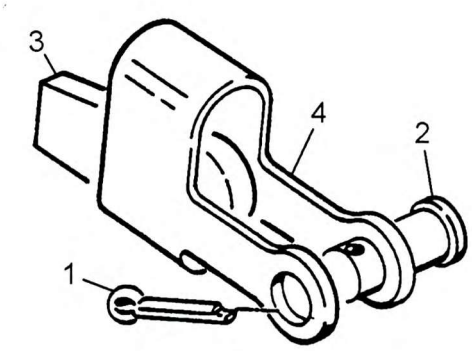

7826000006

(SHEET 1 OF 1)